Bickerdike Allen Partners

EAST DEVON DISTRICT LOCAL PLAN
PROPOSED RESIDENTIAL DEVELOPMENTS
AROUND EXETER AIRPORT

(SECOND NOISE APPRAISAL)

Our Ref: A5441/R2A
July 2001

Report To:

East Devon District Council
Council Offices
Knowle
Sidmouth
Devon EX10 8HL

CONTENTS PAGE NO'S

1. INTRODUCTION

1.1 The Brief

Bickerdike Allen Partners (BAP) were retained in October 2000 to carry out an independent appraisal of impact of Exeter Airport noise with respect particularly to the two proposals under formulation for large new residential settlements at Clyst Hayes and at Southbrook, see Figure 1. BAP were specifically requested to:

i) Advise upon the extent and value of noise exposure categories surrounding Exeter Airport in relation to both landing and take-off aircraft, operational ground noise, and engine testing noise in respect of present and known future activities at the Airport.

ii). With particular reference to ground testing give specific guidance as to what standard should be used to assess this noise source.

iii). In the light of i) and ii) advise on the extent of the area of land to the north and east of the Airport where the Council could substantiate an objection to residential development on grounds of existing or potential future noise impacts from operations at the Airport.

BAP were provided at the onset of this study with various documents prepared by noise advisers retained by the Airport and the developers of both settlement sites, see Appendix 1. BAP recommended in light of the considerable work already undertaken by these parties, that an expeditious way forward would be to bring together these noise experts and seek agreement on the key noise issues. BAP were pleased that all parties agreed to assist in such a technical dialogue, and in fact all parties provided further information to assist the Council's consultant.

BAP, with the assistance of the Airport, arranged a detailed technical meeting at the Airport on 29th November 2000. At that meeting many of the key noise facts were agreed, such that the advice issued herein would be accepted in general by all the parties.

The BAP study included carrying out some checks using in-house data on the detailed noise values used by the parties, study of numerous reports, see Appendix 1, dialogue with the noise experts, analysis and preparation of a report.

1.2 The First Noise Appraisal

During the study BAP's brief was confirmed to be seeking an informed reply to two key questions. BAP completed their initial appraisal and issued on the 12th February 2001 a short report to East Devon District Council, in that report BAP's response to the key questions was given and is repeated here.

(a) Does the current and projected noise from Exeter Airport make the use of the land identified by Messrs Wilcon (Clyst Hayes) and by Redrow/Beazer/Prowting (Southbrook) for possible new communities unsuitable in planning terms for the proposed residential development?

FINDING 1

"The current and projected noise from Exeter Airport does not make the use of the land identified by Messrs Wilcon (Clyst Hayes) and by Redrow/Beazer/Prowtring (Southbrook) for possible new communities unsuitable in planning terms for the proposed residential development."

With regard to airborne aircraft noise the forecast information is clear and supports the finding above without qualification.

With regard to ground noise from normal operations again the forecast daytime information is clear and supports the finding above. No information is available for night-time ground noise but future forecasts show very little activity at night. This suggests that again the finding is sound. The concern which does arise from the numerous developments near the Airport, and in particular the Inter-Modal Freight Terminal is whether in the future freight would pass from rail to air. If so there would appear to be the possibility of increased cargo activity, which often takes place at night. It would be prudent for a check to be made on the forecasts used in this noise analysis to see whether the forecasts had taken into account all the proposed developments nearby. On the basis of current information the finding on suitability of the sites is supported.

With regard to engine testing noise the situation is not clear as there is no forecast of how often such tests will occur or the form of such tests. Also there are no agreed methods of noise impact assessment for engine ground running noise. On current information BAP believe the finding above is correct. Clearly there is not sufficient information that could support a refusal of application for residential development, where the closest new house would be 1000m distant. It is recommended that the matter of the form and number of engine ground runs, especially at night, should be considered further and clearly it would have to be so considered if the planned application for a new maintenance hangar and related test area occurs.

And with regard to the second question,

(b) If the land is suitable, has one site clear advantage in noise terms over the other?

FINDING 2

"The land at Southbrook is more distant from the Airport and its associated engine testing area than Clyst Hayes and therefore has a slight advantage in noise terms."

As both sites have been found suitable any relative advantage is small. The advantage is a reduced risk of noise effects from ground operations, not that that risk is currently seen as significant.

And BAP highlighted the problem over assessment of engine ground running noise.

With regard to the suitability of these two sites in noise terms, resolution of the noise emission from the other major developments should be made. The noise matter of engine ground running noise should be resolved by provision of detailed forecasts of future testing, and in particular night-time tests.

1.3 Recent Work

On receipt of the BAP report the authority issued the report on the 16th February to British European and Exeter International Airport for their comments. Detailed letters were subsequently received from both companies, see Appendix 1. These included considerable criticisms of BAP's first report, but also included positive proposals to follow up the issues highlighted in BAP's report over establishing the level of future engine ground running by British European and taking further noise measurements. BAP's initial response to the criticisms was that none of the points raised altered the initial advice repeated again in section 1.2 of this report above.

BAP were instructed on the 26th April 2001 to carry out this further work, and in particular to circulate BAP's first report to the other noise consultants, arrange a round table discussion with them to agree the location and timing of the noise tests and the types of aircraft to be tested.

BAP wrote therefore on the 5th May 2001 to

- Mr Vernon Cole - Cole Jarman Associates - Noise adviser to Clyst Hayes.
- Mr Bill Stubbs - Wimtec Environmental Ltd - Noise adviser to Southbrook.
- Mr Mike House - Mr Mike House - Noise adviser to Exeter International Airport

and Mr Rob Thomas of British European.

The letter enclosed BAP's first report and sought any further comments and noted the proposed meeting of noise experts set for 1st June 2001. BAP subsequently issued a draft agenda for that meeting to all parties and the meeting was held at the Airport on Friday 1st June from 1.30-3.30pm.

With regard to further comments on BAP's initial report, BAP received the following responses:-

Mr Vernon Cole (Clyst Hayes) - letter of 16th May 2001
Mr Bill Stubbs (Southbrook) - letter of 4th June 2001.

Further correspondence was then exchanged between BAP and Mr Bill Stubbs (Southbrook).
BAP letter of 5th June to Mr Bill Stubbs
Mr Bill Stubbs fax of 11th June to BAP.

BAP have therefore now received comments from all noise advisers on the first report issued to East Devon District Council in February 2001. As will be seen by inspection of the responses noted above, and copied into Appendix 1, the comments vary in content. The main matter of concern related to the evaluation of the noise arising from future engine testing at the Airport.

With respect to BAP's finding that airborne aircraft noise, ground operation noise related to flying operations did not produce noise at a level which would restrict the proposed residential developments, in general no contrary view was taken, see Table 1. Mr House, noise adviser to the Airport raised criticisms on BAP's air noise evaluation but did not advise that the general finding was in error.

With respect to BAP's finding that on the basis of the available information there is no indication that engine maintenance ground running noise would be sufficient in magnitude, or regular in occurrence to prove that residential development could not take place at the two residential sites, various responses were made.

British European and Exeter International Airport advised that BAP's initial analysis had underestimated engine testing noise, and Mr Vernon Cole for Clyst Hayes whilst indicating BAP's report was clear, concise, and presented a fair appraisal, raised contrary concern that BAP's analysis of engine test noise may have been pessimistic. Mr Bill Stubbs for Southbrook, criticised the report for not pointing out a clear advantage of Southbrook over the Clyst Hayes site and for not adopting the most stringent noise criteria or for taking into account engine testing noise for larger aircraft.

BAP accept that the findings of their early report had to be on the basis of the information available to BAP at that time. That consisted of advice that very few noise complaints have been received from people resident in the area related to engine testing noise, and no clear convincing information was available on the form and nature of future testing. As BAP were requested to provide advice to their Client, which would be sufficiently robust to support a possible decision to determine the possible new residential developments unsuitable in planning terms (by virtue of noise), no such advice could be given.

BAP, as mentioned earlier, brought the noise experts to a joint meeting on 1st June 2001. Appendix 2 includes a copy of the minutes of that meeting. The minutes were circulated to all parties on the 5th June 2001, having been initially checked by John Maidment and Mike Foster. Subsequently comments have been received from British European, Mr Vernon Cole for Clyst Hayes, Mr Bill Stubbs for Southbrook. The working copy in Appendix 2 includes all the comments received to-date.

At that meeting BAP tabled a technical note on a possible way to carry out noise predictions of the aircraft types for which no noise tests will have been carried out at Exeter, and sought technical comments from the specialist noise advisers. BAP received a letter from Mr Vernon Cole for Clyst Hayes on 11th June 2001, confirming agreement in effect to the predicted engine test noise for various aircraft at a reference distance of 152m. No other comments have been received to-date.

BAP recently organised with the collaboration of all parties noise tests of two aircraft at Exeter. Due to the need to carry out the tests when the particular aircraft specially visited Exeter, and quickly to allow the Local Plan to proceed, the tests were made on Friday 15th June in less than ideal weather conditions. It was agreed that all test results would be made available to all parties and BAP arranged that circulation.

In light of the tests, the dialogue mentioned above, further independent analysis, BAP have reconsidered engine testing noise at the Airport, and this forms the main context of this second report. As mentioned earlier, BAP's findings on suitability of either residential site with respect to airborne aircraft noise and ground operation noise appear to be accepted by all parties. There is still no information on the noise emission from the other developments, i.e. the Skypark (Application 00/P0314), and Exeter Gateway - International Freight Terminal, and so their impact on proposed residential use cannot be currently assessed.

This report continues with a further Noise Appraisal which describes the recent engine testing noise tests, recent predictions and gives analysis on the future noise that might arise on the proposed residential sites, Southbrook and Clyst Hayes. The vexed matter of suitable noise criteria is then discussed, and in Section 3 a discussion given on the suitability of these proposed residential sites with respect to current and future engine testing noise. The report concludes in Section 4 with a brief summary.

2. NOISE APPRAISAL

2.1 Engine Testing Noise: Introduction

To ensure safe operations, civil aircraft are subjected to regular scheduled inspections at pre-determined intervals based on the hours flown, landings made or date since last inspection. These checks vary in content, the frequency and content of the checks are determined by the aircraft manufacturer and formally approved by the CAA. Some of these maintenance checks require the aircraft's engines to be run. The majority of engine ground runs are undertaken with the engines on idle for a period of approximately 4 minutes. More detailed maintenance checks require engines to be run up to full power. Appendix 3 copies a maintenance operations statement for a modern small regional jet, Canadair RJ, as suggested for Birmingham International Airport. This notes that for Type 'A' Maintenance, Type 'C' (Equalised) no ground engine runs above idle setting are envisaged. Higher power engine runs are envisaged as part of Out of Phase Maintenance and for unscheduled defect rectification. It is the latter testing that is unplanned and may have to occur on demand at anti-social hours.

The noise generated by engine testing is a serious issue at many airports, and action has been taken at many Airports, as at Exeter, to limit such testing at night, see Table 2.

The noise emission varies in terms of duration and magnitude related to the maintenance that has been undertaken. Most airports, as Exeter, prescribe locations airside where the noisiest, the high power, testing shall be performed. These are usually chosen to minimise effect on nearby local communities. At some major Airports, noise barriers are erected around the selected location to minimise noise emission to the local community, such facilities are present in UK for instance at Heathrow, Stansted and Manchester.

Due to the measures taken and the relatively small number of high power tests it is usually found that noise complaints to Airports mainly relate to effects from flying operations not from engine testing facilities. During the day the engine test which involves operating one or more of an aircraft's engines at high power is no noisier than the regular use of engines at high power as aircraft departs. During the night engine testing can be more noticeable, as there are often fewer flying operations, and the ambient noise is less.

A local exception to these generalisations is the past situation at Plymouth City Airport, where considerable noise complaints arose due to early morning, 05.30 to 06.30, regular engine testing of twin turbo-propeller De Havilland Dash 8 aircraft. Such testing occurred several days each week, at an unshielded location from local housing, approximately

200m distant. The houses were exposed to noise levels in the range 76-91 dB L_{Amax}. Despite that level of exposure some residents indicated resistance to use of noise barriers proposed to reduce noise, whilst others sought a total ban. It has been agreed at Plymouth to seek to reduce engine test noise on average to 65 dB L_{Amax} at the houses. That is to the criterion suggested by British Airways and their noise advisers Wimtec Environmental Ltd for the design of the proposed new engine test facility related to the Heathrow T5 proposal.

Engine testing is an essential operation at Airports, and is difficult to appraise in terms of noise impact appraisal. The difficulties often relate to the problem of assessing the number of such tests (as they involve tests related to unscheduled defect rectification), the uncertain timing of such tests, the variation in power settings during a test, the directionality of the sound emitted from the aircraft, and the complex matter of sound propagation over long distances over ground. The latter relates to the considerable affect of how much sound is attenuated as it passes from the engine test location to the distant receiver location. This is not a constant factor as it varies with atmospheric/weather effects. Despite all these complexities some impact assessment is usually possible, and in the current circumstance at Exeter various assessments have been made by the noise advisers to the parties. In order to obtain as much agreed information as possible, as mentioned earlier, BAP have called the experts together twice, and with the considerable assistance of British European and the Airport arranged noise trials. These trials are now briefly discussed, Appendix 4 gives all the detailed information.

2.2 Engine Testing Noise Trials: 15th/16th June 2001

At the noise advisers meeting of 1st June, British European offered to bring to Exeter one of their latest regional jet aircraft, a Bombardier Canadair Regional Jet Series 200 for the engine test noise trials, and to make available one of their Exeter based Bombardier Dash 8-200 twin propeller passenger aircraft. Previous noise tests had been made independently by Mr Mike House for the Airport at Exeter on a British European British Aerospace 146 four engined turbo-fan transport, and on a Fokker F27. Mr House has made available full details of the testing done on those two aircraft, the main results were given in Mr House's report of 31st April 1999 (see Appendix 1). As a result of the noise trials at Exeter, noise information has been collected near aircraft of the four aircraft types which make up nearly all the types currently operated by British European. It is noted that within a particular aircraft type, e.g. the BAe 146, there are various versions, some with different engines such that small differences in noise emission will arise. However as will be seen later the differences in sound propagation to neighbouring distant areas due to weather effects has much greater effect on noise received than the noise variation due to aircraft engine variants.

BAP were advised that the CRJ-200 aircraft could be made available late on Friday 15th June, and no other date could be identified until later in June. BAP therefore advised all parties to proceed with the planning for noise tests on the 15th June. The weather reports were varied, and in order to get the trials done when the weather experts identified that during the night conditions would be without rain or strong winds, the test was confirmed.

The noise advisors and representatives from East Devon District Council, British European, and the Airport met therefore at 21.30 on Friday 15th June. Using one acoustic calibration device all noise equipment was calibrated so as to ensure all equipment would achieve adequately accurate noise measurement. At that time the rain which had been present for several hours ceased. As the CRJ-200 aircraft had not at that stage completed its passenger service to Birmingham, it was agreed to carry out tests on the Dash 8-200 aircraft first. Therefore all noise measurement teams departed to the test locations, two at Clyst Hayes (W1 and W2), two at Southbrook (S1 and S2), one at Rockbeare (EDDC1), three airside at various moderate distances from the test aircraft (BAP1, BAP2, BAP3), and at many locations near the test aircraft (MEH/JSP), see Table 3 and Figure 2. The aircraft was started on the distant apron and then under its own power moved to the test location, which was in the centre of the cross runway, at 80m from the end of runway. The aircraft was arranged to face west, actual heading 260^0, as would be usual if the common westerly wind had been present. During the trials the wind was not from the west, but was from the south, 180^0. The wind strength was low during the first tests on the Dash 8-200, 06-09 Knots, during the second tests (those on the Canadair CRJ-200) the wind direction moved towards 170^0, and the wind strength increased to 10-12 Knots.

On arrival at the test location the Dash 8-200 at just before 23.00 hours began its test sequence. This consisted of a normal power assurance test, and included nearly 6 minutes of full power testing on the starboard engine, approximately 5 minutes at mid range power on the starboard engine, and then a period at low power, the Quiet Taxi mode. At all times the port engine was on low power. The aircraft then stayed at the test location whilst a Fokker F27 taxied from the apron down the eastern end of the main runway, before departing towards Exeter. After that operation which occurred in the period 23.23-23.25, the test aircraft went back to the main apron, and all engines were switched off.

The second test aircraft, CRJ-200 arrived from Birmingham and taxied to the main apron arriving there at about midnight. After refuelling the CRJ-200 moved to the same test location as the Dash 8-200 had previously adopted; and on arrival a heavy rain squall took place. Once this had ceased the CRJ-200 carried out its engine ground running. This starting around 20 minutes to 01.00 hours was a typical test that would be required

after replacement of an engine speed control unit. The aircraft operated both engines at high power for just under ten minutes, before reducing to mid power for six minutes, before reducing to idle setting. The aircraft then returned to the main apron at around 01.00. The measurement teams then briefly met at British European's offices for refreshment and discussion on how the test had proceeded.

Subsequent to the tests BAP have been provided with detailed information on the tests, see Appendix 4. That is detailed description of the aircraft engine settings from British European, the weather recorded at one of the Airport's weather stations from the Airport, the noise results obtained by the two residential developer's noise advisers, the EDDC, and the Airport's noise adviser. BAP issued their initial analysis of their on site measurements on 19th June 2001 to all parties, and BAP have recently issued Appendix 4 to all parties. It was agreed that all results should be made available in full to all participants of the trials. BAP's analysis and interpretation of the trial results is now given.

2.3 Engine Testing Noise Trials Results

Appendix 4 collates all the technical information available on the recent noise trials.

Figure 2 indicates the noise monitoring locations used during the June 15th/16th noise trials. Table 3 tabulates details of the separation between the monitors and the aircraft, and the angle to the aircraft centre-line.

Figure 3 illustrates the noise results obtained by BAP airside at distances from 145-538m from the test aircraft. Figure 4 includes diagrams giving the orientation of the sites to the test aircraft and the wind direction during the test, and in more typical conditions. Figure 5 illustrates the noise results at the more distant locations. Table 4 gives the results measured close to the aircraft for high power testing both for the two aircraft recently tested and the two measured by Mr House sometime ago at Exeter.

The recent noise trials established that in the weather conditions at that time engine test noise was audible at Rockbeare and at both proposed residential sites, and to some extent noise measurements were obtainable. These were made in conditions in which the background noise was probably elevated due to the wind assisted propagation of noise from road traffic on the A30 trunk route to the south of the airport. For some locations that wind assisted propagation will have applied also to the engine test noise. The background noise may also have been increased by the wet road surface of the A30.

Tables 5 and 6 present the results obtained at the monitoring positions for low, mid and high power testing of the Dash 8-200 and CRJ 200 aircraft respectively. The results quoted are the logarithmic average of the measured dB $L_{Aeq,1m}$ values for the periods when the high power test was in operation. At the distant locations, in fact at all locations other than within 45m of the aircraft the engine test noise fluctuated due to presumably fluctuations in sound attenuation with distance due to weather effects. Such effects occur often.

From consideration of the result presentations mentioned above, and the details in Appendix 4, BAP conclude:-

Table 4

- The measurements close to the aircraft indicate considerable local directivity effects.

- The measurements in front of the aircraft indicate high levels at 25m in the range for the front quadrant 106-111 dB $L_{Aeq,1m}$, and for the second quadrant 105-113 dB $L_{Aeq,1m}$. For the turbo-fan aircraft a typical level would be 107 dB $L_{Aeq,1m}$, and for the turbo-prop aircraft 109 dB $L_{Aeq,1m}$. To the rear of the aircraft noise levels generally reduce considerably, however at around 120^0 the highest levels were measured for the BAe 146 and Fokker F27.

- For the angles to the aircraft of the distant noise monitoring locations for the CRJ and Dash 8-200, the close measurements were about 105 dB $L_{Aeq,1m}$ and 108 dB $L_{Aeq,1m}$ at 25m. The aircraft tested previously indicated higher levels, i.e. for the BAe 146 about 111 dB $L_{Aeq,1m}$ and for the Fokker F27 about 114 dB $L_{Aeq,1m}$.

- For the twin turbo-prop the engine noise at 90^0 to the aircraft axis reduced by 5 dB as the engine was throttled back to mid power setting and then by 8 dB or so to the quiet taxi engine low power setting, see Appendix 4.

- For the twin turbo-fan the engine noise at 60^0 to the aircraft axis reduced by about 5 dB as the engine was throttled back to mid power setting, and then by a further 2-3 dB to the ground idle setting, see Appendix 4.

Table 5

- The measurements indicate the considerable attenuation of engine test noise with distance, i.e. a reduction from in excess of 100 dB at 25m from the aircraft to a level less than 50 dB at distant locations (greater than 2000m).

- The measurements were made in difficult test conditions such that except for locations airside the clear separation of engine testing noise from background sounds did not occur.

- Despite the difficulties, useful measurements were obtained, and these indicated for the twin turbo-prop Dash 8-200 levels around 60 dB for the Clyst Hayes site and less than 50 dB at the Southbrook site and at Rockbeare.

- The wind during the test will have increased the noise heard on the Clyst Hayes site, as the wind was not insignificant in strength and was in a direction which would assist sound propagation to that site, see Figure 4. The occurrence of winds from the south is believed to be rare, and the more usual circumstance would be a wind from the south west, see Figure 4. For that situation the propagation to Southbrook and Rockbeare would be assisted by the wind, such that higher levels might be received. The confusing factor is that of the direction of the source. For instance if the aircraft turned directly into the sound west wind, Southbrook and Rockbeare would be set at the rear of the aircraft practically on the axis of the aircraft where engine test noise is much less.

- The Dash 8-200 tests indicated that tests on low engine setting are 13-15 dB quieter than tests on high power.

Table 6

- The tests on the CRJ-200 twin turbo-fan aircraft indicated levels around 60 dB for the Clyst Hayes site and around 43 dB at the Southbrook site and at Rockbeare.

- Those are for the Clyst Hayes site similar levels to those obtained during tests on the Dash 8, and slightly lower levels than obtained for that aircraft at Southbrook.

2.4 Future Engine Testing

At the noise advisers meeting of 1st June 2001, Mr Thomas of British European advised on the testing he envisaged would take place at Exeter, see Appendix 1. Subsequently more information has been requested from Mr Thomas by Mr John Maidment of East Devon District Council.

At the meeting, Mr Thomas advised that there would in the future be less testing of the Fokker F27 aircraft and more on the BAe 146, Dash 8 and Canadair CRJ types. He also advised that currently British European find they can work within the Exeter Code of Practice for testing which limits noise testing in the hours 23.00 to 06.00 hours. Mr Rob Thomas however indicated that he envisaged due to bans on early morning testing at

other Airports, it would be necessary to carry out in the future some early morning testing in the period 05.00-06.00, e.g. one such operation per fortnight. It was not clarified as to whether that envisaged test would involve a high power run. BAP's experience at other Airports is that high power runs are a minority of the engine ground running; for instance at one Airport it related to 10% of the annual engine runs carried out.

Mr Holley, Chief Engineer, of British European replied, to Mr Maidment on the 22nd June 2001, and advised that over the last year there had been 436 engine ground runs and of these 2 were in the early hours of the morning per month, see Appendix 1. The 436 engine ground runs consist of ground runs made before and after maintenance for 200 aircraft over the last year, and 3 runs per month related to ad hoc maintenance during that year.

This advice confirmed Mr Thomas's suggestion of 1 early morning test per fortnight. BAP have assumed that this test will involve a high power run; this BAP believe is a worse case assumption.

Recent technical press advice is that the airline is not to continue operating CRJ aircraft, but is to concentrate on Dash 8 and BAe 146 types.

2.5 Engine Testing Noise Impact Criteria

It has been agreed between the noise advisers, see Appendix 1 that there is no agreed method of noise impact appraisal and related criteria for engine test noise. BAP mentioned in their first report, two approaches adopted elsewhere in UK, and sought at the recent noise advisers meeting, that of 1st June, see Appendix 2, the opinion of the other parties. The noise criteria adopted for other environmental noise events has been developed in light of numerous research studies which have related community reaction to measured noise levels. None is available for this engine test noise. In practice most airports attempt to mitigate noise impact by careful choice of location for testing and restrictions on duration and time for tests. The resultant effect is that at most Airports, noise complaints related to ground engine tests are very few and are much less than received over general flying activities.

The noise advisers have suggested two approaches to engine test noise impact assessment. These are to adopt absolute criteria or to adopt the excess over background noise, the BS 4142 approach, where impact is assessed by the degree of excess of the engine test noise over the background. The noise advisers do not agree on which approach is appropriate, or to whether the approach suggested by any adviser has merit. BAP point out that, in the absence of the detailed research which would underpin

criteria/noise impact assessment methodology for engine test, all criteria suggested are unsupported other than by personal opinion. The various approaches are briefly reviewed now, and BAP's opinion on the validity of the approaches given. The advisers did agreed that the critical matter was night-time testing and so below concentration is made on the criteria for that time.

2.5.1. Absolute Criteria

The noise advisers to the developers of the proposed residential settlements both suggested absolute criteria for impact assessment.

Mr Cole for Clyst Hayes suggested use of 65 dB L_{Amax}.

Mr Stubbs for Southbrook suggested use of 55 dB L_{Amax}, and explained that although he had given evidence for use of 65 dB L_{Amax} for British Airways at Heathrow T5 public inquiry, and had recommended its use at Plymouth City Airport for Plymouth City Council that the opportunity with respect to the location of new residential sites should adopt the most severe criterion. He pointed out, see Appendix 2, that his most severe criterion related to seeking to achieve the internal noise level of 45 dB L_{Amax} with windows fully open. That he suggested related to an assumption of an attenuation of 10 dB between external and internal noise.

Returning to the "Heathrow criterion" 65 dB L_{Amax}, British Airways clarified at the T5 inquiry the basis of their suggested criterion for their proposed new engine test facility. I copy here their views expressed in Topic 5 Position Statement, paragraph 8, paragraphs 8.1-8.3 -

"Night-Time Testing

8.1 BA and LBH agree that a night-time noise level criterion should be based on sleep disturbance. (BA2087, A4; Griffiths, D377, p54)

BA's position is that an external night-time level of 65 dB L_{Amax} is a reasonable criterion for the nearest or most exposed residential property to the GRP. This is compatible with known information about sleep disturbance, so that the restorative process of sleep is preserved, and is consistent with the comprehensive review of sleep disturbance due to transportation sources undertaken by Vallet who cites 93 references on the subject. (BA96, p12, para 5.10). It may be compared with the night-time Noise Exposure Category (NEC) C criterion of 82 dB L_{Amax} for regular individual noise events in PPG24. (PPG2, Annex 1 notes: HIL/250, p67, para 7.18).

8.2 *Allowing for attenuation by partly-open windows (15 dB), an external level of 65 dB L_{Amax} corresponds to an internal level of 50 dB L_{Amax}, below Vallet's internal range of 52-55 dB L_{Amax} for aircraft noise. The BA criterion of 65 dB L_{Amax} is therefore a conservative criterion in itself, and all the more so when one takes into account the very low numbers of engine tests at high-power in the GRP and the duration of those tests, agreed to be typically 2 minutes at high power. (Stubbs, D375, pp35-36; Griffiths, D377, p53; BA2087, A2).*

8.3 *LBH relies on a night-time sleep disturbance criterion of 60 dB L_{Amax} external and 45 dB L_{Amax} internal (assuming partly-open windows) derived from "Community Noise" (C/D233), which is not empirically based on an understanding of the impact of the existing Heathrow GRPs in the community. (Griffiths, D377, p66). That document, which is not WHO-approved policy and had not been adopted by the UK Government, indicates that the number of events is relevant to the criterion for sleep disturbance. (Stubbs, D375, pp35-37). Results of studies reported in "Community Noise" variously correlate sleep disturbance with internal noise levels in excess of 50 dB L_{Amax} for more than 50 events per night, 45 dB L_{Amax} for more than 40 events per night, and 60 dB L_{Amax} for 8 events or more per night. "For a good sleep, it is believed that sound pressure levels of approximately 45 dB L_{Amax} should not appear more than 10-15 times per night". (CD/233, p66, para 7.5.7). These levels may be compared with Wimtec's highest predicted internal noise level of 36 dB L_{Amax} at Position 20 (equivalent to Site 20A in HIL/201, Table 52A) in neutral conditions, for an event which, on average, would occur once every other night and, even using the LBH approach, not more than 3 times per night in the FMU GRP. (D375, p37; Cobbing, D393, p60; BA96, p15, para 7.6)."*

Mr Cole points out that in developing a suitable assessment threshold the infrequent nature of the events should be taken into account, and agrees to the use of the 65 dB L_{Amax} criterion as used by Mr Stubbs at Heathrow and Plymouth.

2.5.2 Relative Criteria

Mr House for the Airport suggests use of the BS 4142 approach, and used such in his detailed report of October 1999. In the approach at night the measured noise from the engine testing, modified to a rating level by the addition of 5 dB, is compared to the background noise.

For the situation when the engine test noise determined over a 5 minute period exceeds the background noise level by 5 dB, and so the rating level (engine test noise plus 5) exceeds the background by 10 dB, noise complaints are considered likely.

For the early morning situation, when the agreed background level would be 35 dB (A), then this assessment method would suggest noise complaints if the engine test level is 40 dB (A).

If the engine test noise maximum level occurred for five minutes then in effect this approach suggests impact if the level exceeds 40 dB L_{Amax}.

It is seen that this criterion is much more stringent than those suggested by the noise advisers to the residential developers, i.e. 55 or 65 dB L_{Amax}.

The BS 4142 approach arises from the standard first published in 1967 and widely used in UK to assess industrial noise. The Standard gives a method for rating industrial noise affecting mixed residential and industrial areas. It describes methods for determining, at the outside of a building:

a) Noise levels from factories, or industrial premises, or fixed installations, or sources of an industrial nature in commercial properties; and

b) background noise level.

The BS 4142 approach is used in UK for industrial noise, such noise usually occurs continuously throughout the year, not once a fortnight for a few minutes in one hour as under consideration here.

Using this approach Mr House in his report indicates for night testing of a Fokker F27 a noise impact area of radius 6 kms, for his "marginal complaints" criterion. He advised in that report that noise complaints do frequently occur from current operations at the Airport. BAP have been unable to find such frequent complaints. Discussion with East Devon District Council indicated few complaint records (2 in total), and the detailed record by the Airport has also not shown many complaints.

The Airport advised in 21st November 2000 that an average of about 5 complaints annually could be associated with Exeter Airport activity, that is based on the records for the periods October 1989-December 1994, and January 1997-December 1998. The majority of these complaints relate to normal flying activities not engine testing noise. The

Airport provided details of their complaints received in the period May 1999-October 2000, 40 in total, of which 7 related to engine testing noise.

During these periods BAP understand considerable engine testing has been carried out, although accurate details have not been made available; Mr Holley recently advised of 436 engine ground runs over the last year.

2.5.3 Appropriate Criteria

BAP suggest that some of the considerable differences in technical opinion over engine test criteria reviewed above arise from the planned use of the criteria. For instance if it was a criterion to establish no risk of any effect from engine testing then inaudibility could have been suggested. If it was a criterion to establish a situation where no risk of complaints over engine testing would arise then the criteria suggested by Mr House would be a possible approach. If the criterion is to avoid sleep disturbance effects with windows flung fully open and using a stringent limit on internal peak noise, then Mr Stubb's approach for Exeter would be a possible approach. If in contrast a less stringent internal peak noise criteria is adopted and windows partially open, then Mr Cole's criterion could be considered. If, as is usual in UK, consideration is given when considering noisy situations, to the benefit of shut windows then a higher external criterion could be considered. For instance in PPG 24 only if regular events occur at 82 dB(A) external is the noise exposure category for new housing affected. Central Government studies have established that aircraft noise events have to exceed 82 dB(A) at night for there to be for the average person a detectable effect on sleep.

The usual transportation criteria adopted in UK and elsewhere do not seek a situation of no noise annoyance. In appreciation of the vast variety in responses by individuals to noise the criteria often relate to a situation in which the scientific studies show at least 10% of those surveyed would consider the noise seriously annoying. Such studies show that at such levels i.e. 57 dB $L_{Aeq,16h}$ a similar % of the population would indicate no effect at all.

Of concern here is at least two matters, these are to ensure new residents reside within a high quality acoustic environment, and to ensure that any adverse reaction to those who choose to live near an Airport is not of such magnitude as to cause an impact on the aspirations of the Airport and its clients to develop. Experience in UK, indicates that even with considerable adverse reaction, opposition at Public Inquiries, airports develop where a clear need is established.

BAP's view is that the use of the BS 4142 is neither supported as valid by the experience at Exeter, is justified by engine test noise studies elsewhere, is recommended for such use by any authority, and does not assist in resolving the planning decision of concern here.

BAP's view is that the use of an absolute value to protect residents sleep is appropriate, and suggest it should be chosen to take into account partially open windows and to take in account the number of tests undertaken. BAP therefore suggest that the 65 dB criterion should be used as an indicator of impact, and the degree to which this is in planning terms a significant impact must relate to the number of such occurrences per night, per week, per year.

2.6 Engine Testing Noise Predictions

Reference Noise Levels

BAP tabled a note on the prediction of engine test noise for various aircraft of the noise advisers meeting of 1st June. The response to-date has been agreement from Mr Vernon Cole (Clyst Hayes) that the predicted levels at 152m are acceptable. That is predicted levels of order at 152m for the

CRJ-200 86 dB

(The measured level at 148m was 85dB)

and for the Dash 8 83 dB

(The measured level at 148m was 79 dB)

For the BAe 146 the predicted level is 87 dB.

(The deduced level from Mr Mike House's tests, see his note of February 2001 was 67 dB at 600m which he advised relates to 86 dB at 152m, when allowance is made for sound attenuation with distance of 9.4 dB/doubling.).

In summary for these aircraft types a reference noise level (level at 152m) of around 86 dB can be taken as typical.

The prediction indicated that if one considers the larger Boeing 757 aircraft, then the engine test noise would increase by 5 dB or so.

Sound Propagation

Figure 5 plots the recent noise results against distance from the aircraft. Also shown is a line through most of the results which relates to a sound attenuation with distance rate of 8 dB/doubling.

Sound attenuates with distance due to many factors. These include normal spherical divergence of sound waves (this gives 6 dB/doubling), atmospheric attenuation, ground attenuation due to sound interference, and sound absorption as sound passes close to the ground, wind and temperature gradients, atmospheric turbulence, local noise barriers.

Studies have shown various sound attenuation rates, the highest normally adopted for aircraft ground operations is 12 dB per doubling. That attenuation rate was supported by the detailed studies at Heathrow.

The recent tests have shown for the Clyst Hayes site an attenuation rate of lower than 12 dB/doubling, as could be expected from the wind during the test. For Southbrook the attenuation rate during the tests appears to have been about 10 dB/doubling indicating that some assistance to sound propagation was present.

There is no fixed attenuation rate for Exeter as it will vary with wind effects and changes in the other factors which effect long term sound propagation. From the work described here it appears necessary to consider both noise at the proposed sites in adverse and neutral sound propagation conditions. That is when the attenuation rate is slightly lower (8 dB/doubling) than used in the Federal Aviation Authority Integrated Noise Model (9.4 dB/doubling), and for neutral conditions (12 dB/doubling).

As a generalisation from all the details described above Table 7 gives the resultant forecast engine test noise levels for Rockbeare and for the two proposed residential settlements.

2.7 Engine Testing Noise Impact Appraisal

Table 7 attempts to provide a simplified analysis of engine test noise with respect to existing and the two future proposed residential settlements. It has been prepared in order to assist in comprehending the complex noise situation. These complexities which are not included are for instance the small difference between dB L_{Amax} and dB $L_{Aeq,T}$ values, the directivity of the aircraft, the unknown arrangement of the aircraft on particular days (into the wind) etc. Despite its inherent shortcomings Table 7 does allow in BAP's opinion questions over suitability of future land usage to be addressed.

If the planning authority adopted the relative approach (BS 4142) then the noise levels in Table 7 need to be compared with a background level of 35 dB in the early morning, and a consequential criterion for complaints likely of 40 dB. It is clear that this criterion will be exceeded in Rockbeare, population of 400 or so now, and would for most locations at Clyst Hayes and at some locations at Southbrook. BAP's view is that this approach is not

appropriate for reasons given earlier in this report, and particularly because its use now for the 436 engine test runs would suggest major complaints, such do not occur.

If the planning authority adopted the absolute approach suggested by Mr Stubbs of Southbrook, the 55 dB value, then predicted noise for current aircraft would meet that value for Southbrook site except for new larger aircraft in adverse propagation conditions. At the Clyst Hayes site the criterion would not be met for the areas closest to the test aircraft for current aircraft, but would be met at the more distant parts of the site. As for Southbrook with new larger aircraft an excess over the criterion arises.

If the planning authority adopted the absolute approach suggested by Mr Cole of Clyst Hayes, the 65 dB value, then predicted noise at Rockbeare, Southbrook and Clyst Hayes would not exceed the criterion for current aircraft. For a new future larger aircraft the closest location at Clyst Hayes, in the most adverse propagation conditions, is predicted to receive noise in excess of the criterion.

BAP have investigated and indicate in Table 7 the predicted value for a location at 1400m from the test aircraft, just under a mile. This indicates that all the criteria would be met if new housing was set that distant from the test aircraft, both for current and future types.

BAP's view is that the BS 4142 is inappropriate, the stringent 55 dB L_{Amax} criterion is too severe, and that the 65 dB L_{Amax} criterion used at Plymouth and Heathrow has technical support and is appropriate if the amount of testing is as currently suggested. That is no testing in the period 23.00-06.00 generally, with some tests, some requiring high power, once a fortnight. BAP have also taken into account the likelihood of the simultaneous occurrence of the most adverse propagation conditions with an engine test, when the occurrence of a test in the early morning period is only one per fortnight. BAP have also taken into account the likelihood of regular testing by the larger aircraft in the critical early morning period in reaching a view.

BAP also have respected their brief which is to reach an informed position in which any decision taken by their Client on the basis to some extent of BAP's opinion could be substantiated in the normal planning process. In this respect BAP have attempted to adopt criteria used elsewhere in UK, and use reasonable understandable predictions neither seeking to minimise or maximise the estimation of future engine ground test noise. BAP also appreciate that in any planning decision noise is only one of many issues, and has to be considered in the planning balance pertinent to any planning decision.

3. DISCUSSION

3.1 Suitability of Sites for Proposed Development

In considering the suitability of the sites, BAP have assumed the future situation where engine testing will be carried out near the British European hangar not on the centre of the cross runway (as currently occurs). BAP have considered also the future situation with respect to the proposed airport development where the terminal complex is set to the north of the main runway, as opposed to its current south location.

BAP have not been able to take into account the noise emission from the other major developments, that is the Exeter SkyPark and Inter-modal Rail Interchange.

BAP suggest adoption of the impact assessment criterion of 65 dB(A) for early morning, 05.00-06.00, engine test noise. BAP note that it is currently envisaged that there may be one engine test per fortnight in this period.

BAP find that in neutral weather conditions where sound will attenuate considerably with distance both proposed residential sites should not be exposed to significant engine test noise. Such that on the basis of the low number of such occurrences BAP could not substantiate an objection to residential development on the grounds of noise.

BAP find that even in adverse sound propagation conditions Southbrook should not be exposed to significant engine test noise. With respect to Clyst Hayes BAP have estimated that for possible future larger aircraft testing BAP's criterion would be exceeded for housing within 975m of the test aircraft. As the likelihood of the combination of a larger aircraft engine test, in the early morning, in adverse sound propagation conditions is low, this excess would not give substantive reason for planning refusal. BAP have explored a possible buffer zone around the test aircraft, and have estimated that if housing could be set 1400m from the test aircraft the prediction excess would not arise. That, in effect, suggests that the Clyst Hayes development would be located only north of the old A30, as the Southbrook development. BAP suggest this concept should be considered.

BAP have not included in their consideration any noise mitigation measures that might be included in any planning application related to facilities to accommodate larger aircraft at Exeter.

BAP find even in adverse sound propagation conditions, that on the basis of information available to BAP, BAP could not substantiate an objection on noise grounds to the proposed residential settlements.

In summary therefore BAP find both sites suitable for residential development. BAP suggest for consideration that housing on the Clyst Hayes be set back 1400m from the testing location.

3.2 Relative Merits of Competing Sites for Development

In general the Southbrook site is more distant than the Clyst Hayes site from the engine test location, and therefore noise levels will be less due to the extra distance attenuation. Also the Southbrook site with aircraft facing into the south westerly typical wind will therefore have the view of the rear of the test aircraft, where sound emission is less. On these grounds the Southbrook site is better located with regard to the level of engine testing noise than the Clyst Hayes.

In contrast the Southbrook site is set to the north east of the test aircraft such that wind assisted propagation will occur; the typical wind direction will not increase noise levels at Clyst Hayes.

The Southbrook site is generally more distant than the settlement of Rockbeare from the engine test location. Action to ensure adequate management of engine test noise for the existing population in Rockbeare will inherently ensure adequate protection for Southbrook.

In summary BAP suggest that the critical matter is the extra separation of the Southbrook development from the engine test location over that of the Clyst Hayes development, and therefore suggest on engine noise grounds Southbrook is better located than Clyst Hayes.

3.3 Unresolved Issues

The noise emission from the SkyPark and the Inter Modal Freight Terminal are currently unquantified and their effect on the closest of the proposed residential sites, Clyst Hayes therefore cannot be assessed.

4. SUMMARY AND INITIAL ADVICE

The independent study of Exeter Airport noise emission has been undertaken by technical dialogue with the noise experts retained by the Airport and the developers of the two proposed residential settlements and study of numerous technical reports. The study indicates in essence that both sites are suitable for residential development, and that the Southbrook site which is further from the Airport has a slight advantage over Clyst Hayes. These findings relate only to consideration of the sites with respect to noise from Exeter Airport.

EAST DEVON DISTRICT LOCAL PLAN
PROPOSED RESIDENTIAL DEVELOPMENTS AROUND EXETER AIRPORT
NOISE EXPOSURE DUE TO EXETER AIRPORT
KEY FACTS

TABLE 1

Parameter	Values at Development Sites	
	Clyst Hayes	Southbrook
Airborne Aircraft Noise		
Daytime (Future 2011)	<51 dB $L_{Aeq,16h}$	<<51 dB $L_{Aeq,16h}$
(N.B. Usual PPG 24 criterion for major developments <60 dB $L_{Aeq,16h}$)		
Night-time (Future 2011)	<48 dB $L_{Aeq,8h}$	<< 48 dB $L_{Aeq,8h}$
(N.B. PPG 24 Criterion to Category A at night, permission for residential not to be withheld, <48 dB $L_{Aeq,8h}$)		
Ground Aircraft Noise (Taxiing etc.)		
Daytime (Future 2011)	48 dB $L_{Aeq,16h}$	37 dB $L_{Aeq,16h}$
(N.B. Common UK Practice Noise Impact Assessment Criterion for Ground Noise 55 dB $L_{Aeq,16h}$)		
Night-time (Future 2011)	Not computed	

Airport	Propeller			Turbo-fan		
	Ground Idle	Part Power	Full Power	Ground Idle	Part Power	Full Power
Manchester	✓ (23.00–06.00)	✗	✗	✓ (23.00-06.00)	✗	✗
Edinburgh	✓ (23.00-07.00) (1)	✗	✗	✓ (23.00-07.00) (1)	✗	✗
Prestwick	No formal policy. Ground running at night not normally permitted, if required scheduled for early morning.					
Belfast	✓ (2)	✓ (2)	✓ (2)	✓ (2)	✓ (2)	✓ (2)
East Midlands	No routine testing allowed from 23.00 – 07.00.					
Cardiff	✓ (22.30-07.30) (3)	✗	✗	✓ (22.30-07.30) (3)	✗	✗
Stansted	✓ (4)	✓ (4)	✓ (4)	✓ (4)	✓ (4)	✓ (4)
Glasgow	✓ (23.00-07.00) (5)	✗	✗	✓ (23.00-07.00) (5)	✗	✗
Birmingham	✗ (23.00-06.00)	✗	✗	✗	✗	✗
Luton	✓ (6)	✗	✗	✓ (6)	✗	✗

Notes (1) Only permitted in exceptional circumstances and then limited to a maximum duration of 5 minutes.
(2) Airport is remotely located. There are no restrictions and full power testing is available at any time.
(3) Permitted only under exceptional circumstances and for short durations only.
(4) Not normally permitted between 23.00-07.00. In exceptional circumstances, permission may be granted but for full power testing a report is required (latest draft proposals).
(5) Permitted only under exceptional circumstances.
(6) Max duration of 10 minutes, on one engine.

Table 2 - Ground Running Restrictions at Night at Some UK Airports

EXETER INTERNATIONAL AIRPORT
ENGINE TESTING NOISE

MONITORING LOCATIONS

A5441/T1

TABLE 3

Location	Location Description	Approx Distance from Test Aircraft (m)	Angle to A/C* Centre Line
Clyst Hayes			
W1	Treasbeare Lane	1130	105^0
W2	South East of Blue Hayes Farm, Bluehayes Lane	1550	87^0
Southbrook			
S1	North of Jack-in-the Green	2440	132^0
S2	Southbrook Village	3080	140^0
Exeter Airport (Airside)			
BAP1	North of test aircraft	145	140^0
BAP2	North of test aircraft	305	119^0
BAP 3	North of test aircraft	538	108^0
East Devon District Council Rockbeare			
ED1	South west of village centre, playing fields	2060	151^0
Exeter Airport (Airside)			
MEH	On compass base	25-45	Various
JSP	On compass base	25-45	Various

*0^0= directly in front, 180^0 directly behind aircraft.

EXETER INTERNATIONAL AIRPORT
ENGINE TESTING NOISE

MEASURED VALUES CLOSE TO AIRCRAFT (HIGH POWER)
A5441

TABLE 4

ORIENTATION TO TEST AIRCRAFT (Angle to A/C Centre Line)*			NOISE LEVELS AROUND AIRCRAFT dB $L_{Aeq,1m}$ At 25m: AIRCRAFT TYPES				
			BAe 146 (4 engines)	CRJ-200 (2 engines)	FK27+ (2 engines)		DASH 8-200 (1 engine)
IN FRONT 0^0 - 90^0							
	0^0		106		109		
[14^0]	15^0	(21^0)		[110.2] (110.4)			111.2
[29^0]	30^0	(36^0)	108	[108.3] (108.0)	110	110	
[44^0]	45^0	(51^0)		[107.6] (105.8)			
[59^0]	60^0	(66^0)	108	[105.9] (105.7)	113	102	112.3
[104^0]	75^0	(82^0)		[105.6] (104.7)			106.6
	90^0	(95^0)	109	(105.2)	114	100	108.5/107.7
Front Quadrant 0 - 45^{0+}			107	108	110		111
Second Quadrant 45^0 - 90^{0+}			109	105	107		109
BEHIND 90^0 - 180^0							
[102^0]	105^0			[105.2]			
	120^0		113		115	98	
	135^0						106.1
	150^0		103		106	90	
	165^0						
	180^0		63		66	50	
First Quadrant 90^0 - 135^{0+}			113	105	107		106
Second Quadrant 135^0 - 150^{0+}			103	-	98		-

*O^0 = directly in front, 180^0 directly behind aircraft

+ = to nearest whole number

+ For the F27, measurements were made on both sides of the aircraft, therefore there are two values per angle subtended.

EXETER INTERNATIONAL AIRPORT
ENGINE TESTING

(A5441)

SUMMARY: DASH 8-200 HIGH POWER

TABLE 5

	Aircraft/Test Location:	Noise Levels $L_{Aeq,1m}$			
		Ambient	Low	Mid	High
	Dash 8-200				
	AIRSIDE				
	Close to Aircraft				
140^0	Approx. 145m from Aircraft	50	71	75	79
119^0	Approx. 305m from Aircraft	48	62	65	77
108^0	Approx. 538m from Aircraft	48	58	63	73
	CLYST HAYES				
105^0	W1 Approx. 1130m from Aircraft	-	-	50	61
87^0	W2 Approx. Approx. 1550m from Aircraft	-	-	54	62
	SOUTHBROOK				
132^0	S1 Approx. 2440m from Aircraft	43	-	43	48
140^0	S2 Approx. 3080m from Aircraft	43	-	42	45
	ROCKBEARE				
151^0	ED1 Approx. 2060m from Aircraft	38	-	-	45
	AIRSIDE				
	On 25m Radius	-	95	103	108

EXETER INTERNATIONAL AIRPORT
ENGINE TESTING

(A5441)

SUMMARY: CRJ-200 HIGH POWER

TABLE 6

	Aircraft/Test Location:	Noise Levels $L_{Aeq,1m}$			
		B/G	Low	Mid	High
	CRJ-200				
	AIRSIDE				
	Close to Aircraft				
140°	Approx. 145m from Aircraft	50	67	77	85
119°	Approx. 305m from Aircraft	48	58	71	77
108°	Approx. 538m from Aircraft	48	54	64	71
	CLYST HAYES				
105°	W1 Approx. 1130m from Aircraft	-	-	54	62
87°	W2 Approx. Approx. 1550m from Aircraft	-	-	49	59
	SOUTHBROOK				
132°	S1 Approx. 2440m from Aircraft	42	-	39	45
140°	S2 Approx. 3080m from Aircraft	38	-	38	43
	ROCKBEARE				
151°	ED1 Approx. 2060m from Aircraft	-	-	-	41
	AIRSIDE				
	On 25m Radius	-	97	100	105

EXETER INTERNATIONAL AIRPORT
ENGINE TESTING
(A5441)

ESTIMATED FUTURE NOISE AT EXISTING AND PROPOSED RESIDENTIAL SETTLEMENTS

TABLE 7

LOCATION:	FUTURE ENGINE TEST NOISE LEVEL $L_{Aeq,5m}$	
	Adverse Propagation	Neutral Conditions
CLYST HAYES		
Nearest Location (975m)	64 [69]	54 [59]
Furthest Location (2150m)	55 [60]	40 [45]
SOUTHBROOK		
Nearest Location (2150m)	55 [60]	40 [45]
Furthest Location (4200m)	48 [53]	28 [33]
ROCKBEARE		
Typical Location (2150m)	55 [60]	40 [45]
N.B. At 1400m	60 [65]	48 [53]

Simplifying Assumptions

Engine Test Reference Noise Level at 152m:

Current Types	86 dB
Future Large Types	[91 dB]

Sound Attenuation with Distance:

Adverse Propagation	8 dB/doubling
Neutral Conditions	12 dB/doubling

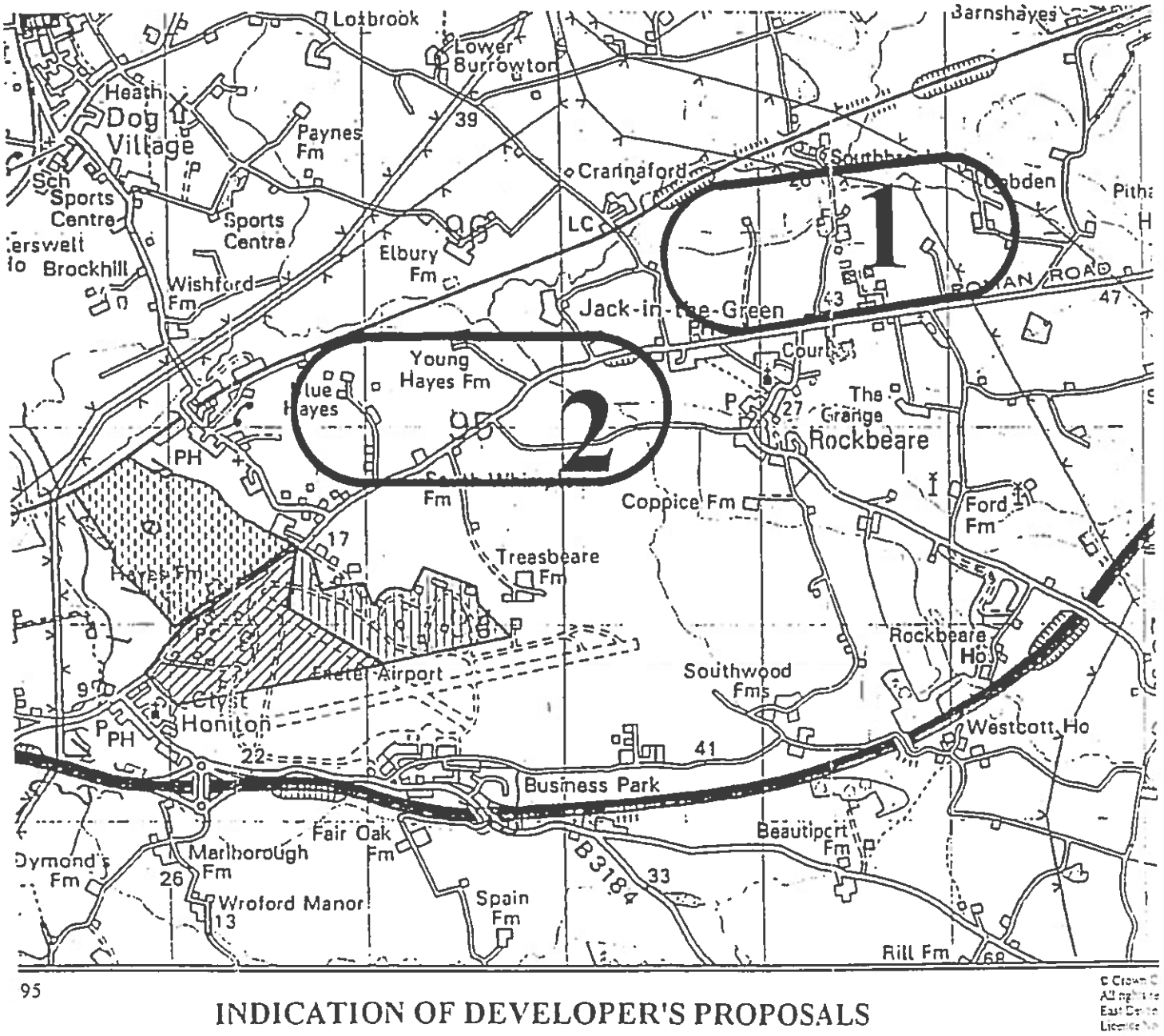

INDICATION OF DEVELOPER'S PROPOSALS

Figure 1 Location Plan of Two Sites

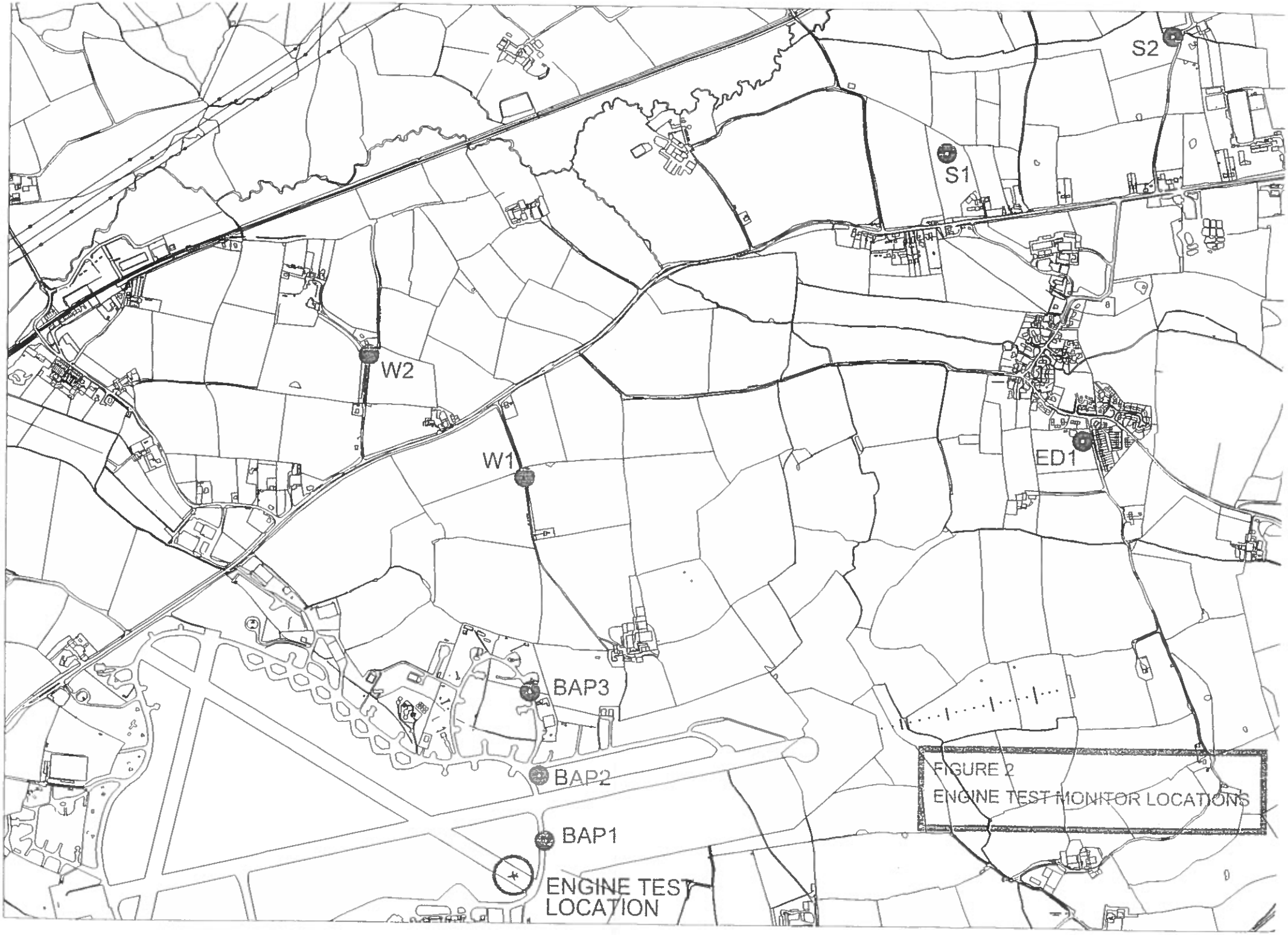

FIGURE 2
ENGINE TEST MONITOR LOCATIONS

Engine Testing Noise: Airside; Attenuation with Distance

Levels at Exeter International Airport during Ground Running Trial - June 2001

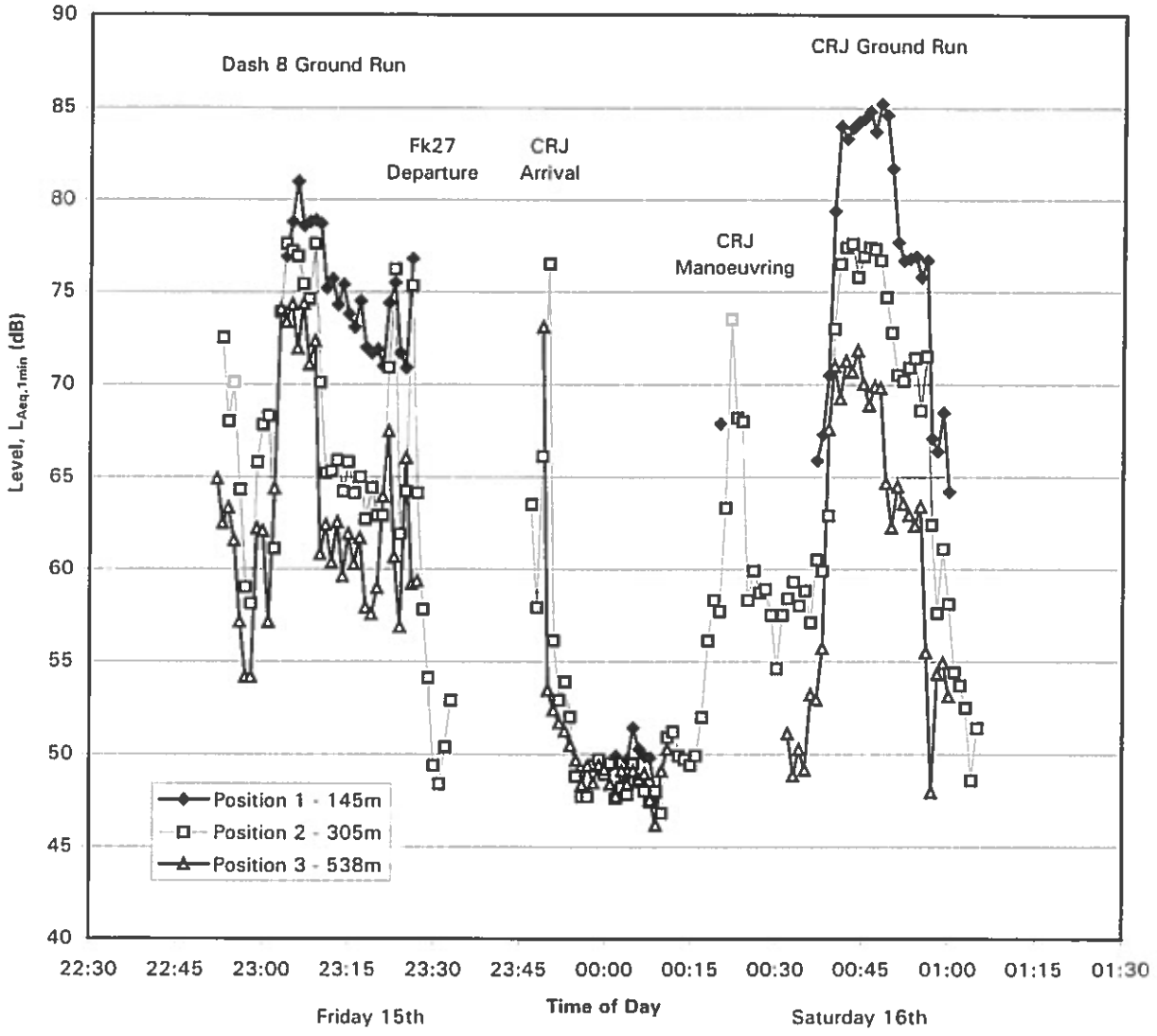

Figure 3

DURING TRIAL

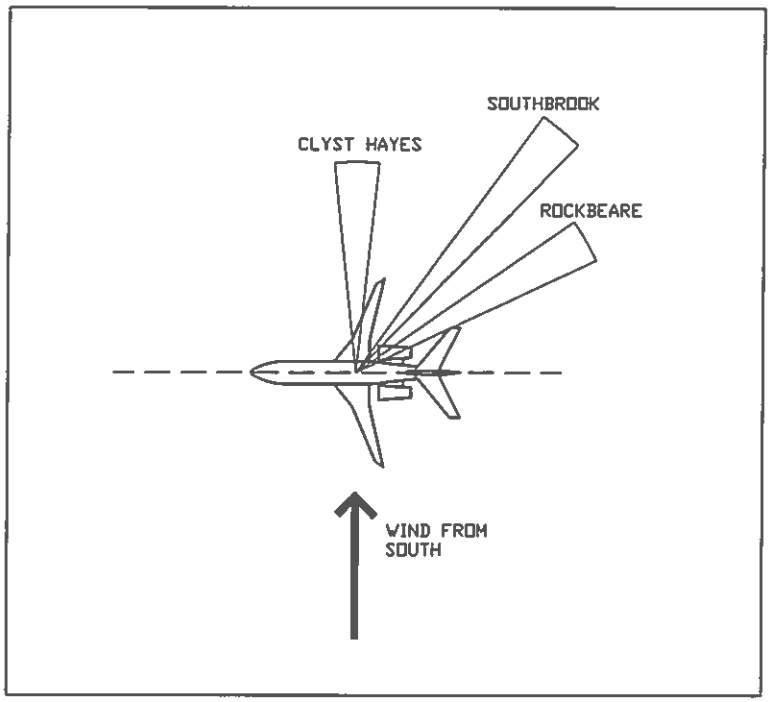

TYPICAL

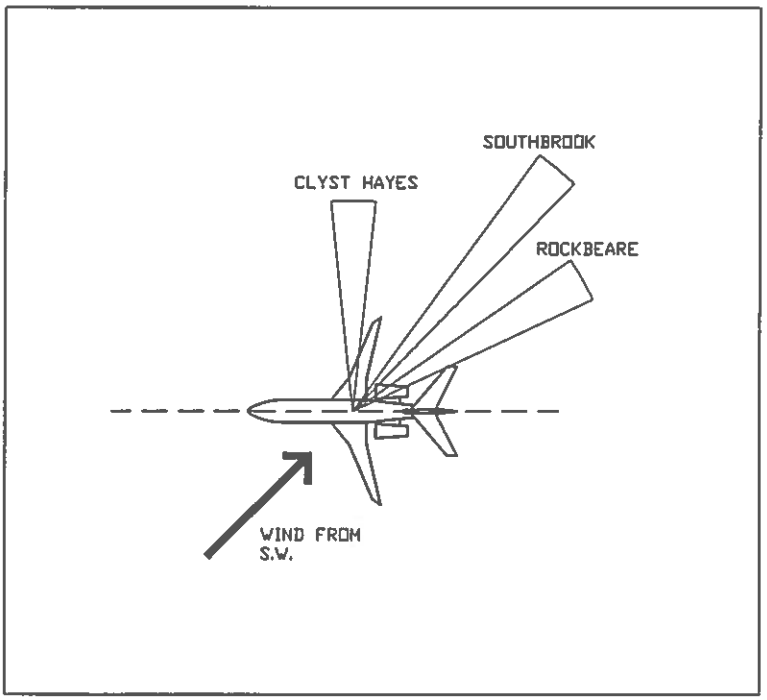

FIGURE 4 - Engine testing Noise: Orientation of Sites to Aircraft and Wind Directions

Engine Testing Noise: Attenuation to Distant Sites

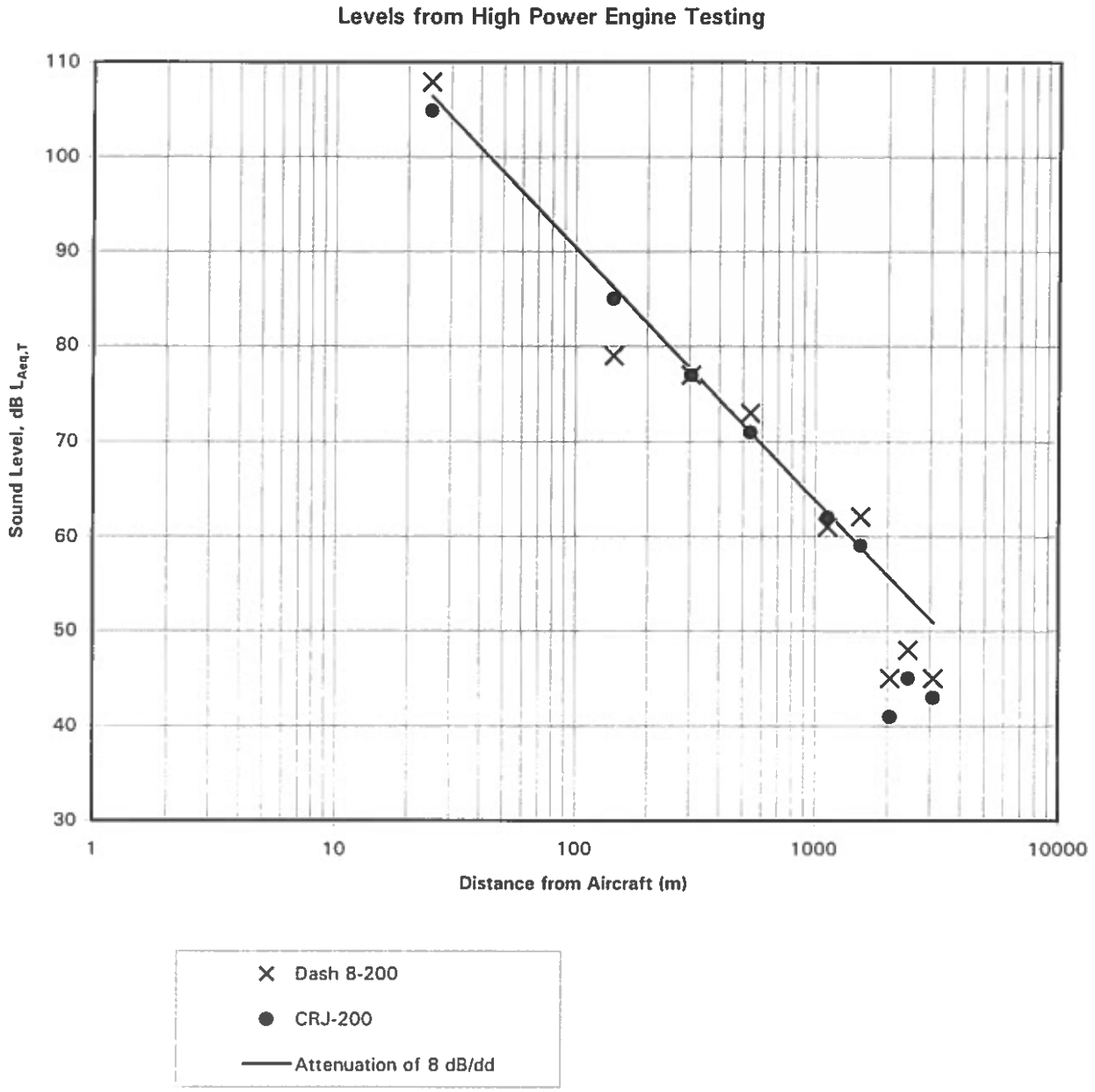

Figure 5